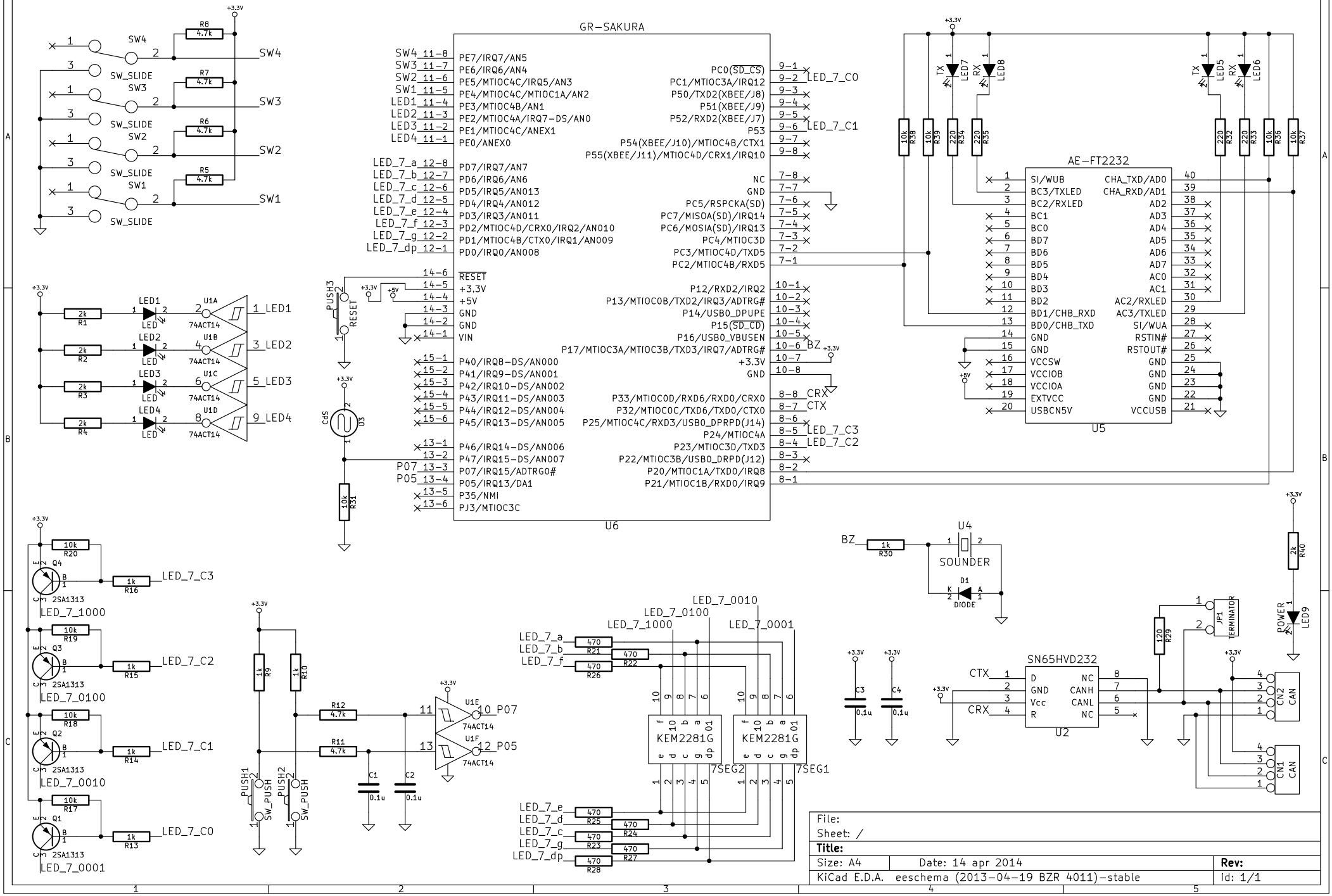
GR-SAKURA
U6
AE-FT2232
U5
SN65HVD232
U2
KEM2281G
7SEG2
7SEG1
SOUNDER
DIODE
TERMINATOR
POWER
CN1 CAN
CN2 CAN
SW_SLIDE
74ACT14
2SA1313
SW_PUSH
PUSH1
PUSH2
PUSH3
RESET
CdS
LED_7_1000
LED_7_0100
LED_7_0010
LED_7_0001
LED_7_C0
LED_7_C1
LED_7_C2
LED_7_C3
LED_7_a
LED_7_b
LED_7_c
LED_7_d
LED_7_e
LED_7_f
LED_7_g
LED_7_dp
LED_7_A
LED_7_B
LED_7_C
LED_7_D
LED_7_E
LED_7_F
LED_7_G
LED_7_DP
SW4
SW3
SW2
SW1
LED1
LED2
LED3
LED4
TX
RX
BZ
CTX
CRX
CHA_TXD/AD0
CHA_RXD/AD1
AC2/RXLED
AC3/TXLED
SI/WUA
RSTIN#
RSTOUT#
VCCUSB
SI/WUB
BC3/TXLED
BC2/RXLED
BD1/CHB_RXD
BD0/CHB_TXD
VCCSW
VCCIOB
VCCIOA
EXTVCC
USBCN5V
PE7/IRQ7/AN5
PE6/IRQ6/AN4
PE5/MTIOC4C/IRQ5/AN3
PE4/MTIOC4C/MTIOC1A/AN2
PE3/MTIOC4B/AN1
PE2/MTIOC4A/IRQ7-DS/AN0
PE1/MTIOC4C/ANEX1
PE0/ANEX0
PD7/IRQ7/AN7
PD6/IRQ6/AN6
PD5/IRQ5/AN013
PD4/IRQ4/AN012
PD3/IRQ3/AN011
PD2/MTIOC4D/CRX0/IRQ2/AN010
PD1/MTIOC4B/CTX0/IRQ1/AN009
PD0/IRQ0/AN008
RESET
+3.3V
+5V
GND
VIN
P40/IRQ8-DS/AN000
P41/IRQ9-DS/AN001
P42/IRQ10-DS/AN002
P43/IRQ11-DS/AN003
P44/IRQ12-DS/AN004
P45/IRQ13-DS/AN005
P46/IRQ14-DS/AN006
P47/IRQ15-DS/AN007
P07/IRQ15/ADTRG0#
P05/IRQ13/DA1
P35/NMI
PJ3/MTIOC3C
PC0(SD_CS)
PC1/MTIOC3A/IRQ12
P50/TXD2(XBEE/J8)
P51(XBEE/J9)
P52/RXD2(XBEE/J7)
P53
P54(XBEE/J10)/MTIOC4B/CTX1
P55(XBEE/J11)/MTIOC4D/CRX1/IRQ10
NC
PC5/RSPCKA(SD)
PC7/MISOA(SD)/IRQ14
PC6/MOSIA(SD)/IRQ13
PC4/MTIOC3D
PC3/MTIOC4D/TXD5
PC2/MTIOC4B/RXD5
P12/RXD2/IRQ2
P13/MTIOC0B/TXD2/IRQ3/ADTRG#
P14/USB0_DPUPE
P15(SD_CD)
P16/USB0_VBUSEN
P17/MTIOC3A/MTIOC3B/TXD3/IRQ7/ADTRG#
P33/MTIOC0D/RXD6/RXD0/CRX0
P32/MTIOC0C/TXD6/TXD0/CTX0
P25/MTIOC4C/RXD3/USB0_DPRPD(J14)
P24/MTIOC4A
P23/MTIOC3D/TXD3
P22/MTIOC3B/USB0_DRPD(J12)
P20/MTIOC1A/TXD0/IRQ8
P21/MTIOC1B/RXD0/IRQ9
LED_7_0010
LED_7_0100
LED_7_1000
LED_7_0001
LED_7_a
LED_7_b
LED_7_f
LED_7_e
LED_7_d
LED_7_c
LED_7_g
LED_7_dp
LED_7_C3
LED_7_C2
LED_7_C1
LED_7_C0
LED_7_1000
LED_7_0100
LED_7_0010
LED_7_0001
LED_7_C3
LED_7_C2
LED_7_C1
LED_7_C0
LED_7_1000
LED_7_0100
LED_7_0010
LED_7_0001
LED_7_a
LED_7_b
LED_7_f
LED_7_e
LED_7_d
LED_7_c
LED_7_g
LED_7_dp
P07
P05
P07
P05
SW4
SW3
SW2
SW1
LED1
LED2
LED3
LED4
TX
RX
BZ
CTX
CRX
CN2 CAN
CN1 CAN
JP1
TERMINATOR
U4
U5
U2
U3
U6
U1A
U1B
U1C
U1D
U1E
U1F
U1A
U1B
U1C
U1D
U1E
U1F
U3
U4
D1
Q1
Q2
Q3
Q4
R1
R2
R3
R4
R5
R6
R7
R8
R9
R10
R11
R12
R13
R14
R15
R16
R17
R18
R19
R20
R21
R22
R23
R24
R25
R26
R27
R28
R29
R30
R31
R32
R33
R34
R35
R36
R37
R38
R39
R40
C1
C2
C3
C4
0.1u
0.1u
0.1u
0.1u
+3.3V
+5V
File:
Sheet: /
Title:
Size: A4
Date: 14 apr 2014
Rev:
KiCad E.D.A. eeschema (2013-04-19 BZR 4011)-stable
Id: 1/1